Work Order ID 65495

January 19, 2011 7:58:19 AM

Item ID: D4190-041
Revision ID: PRELIM
Item Name: External Bellcrank Assembly

Accept

Setup Start
Stop

Start Date: 1/19/11 **Start Qty:** 2.00
Required Date: 2/04/11 **Req'd Qty:** 2.00
Reference:

Cust Item ID:
Customer:

Run Start
Stop

Approvals: **Process Plan:** CL **Date:** 11/01/19 **Tooling:** _____ **Date:** _____
QC: _____ **Date:** _____ **SPC (Y/N):** _____ **Date:** _____

Sequence ID/ Work Center ID	Operation Description	Set Up/ Run Hours	Tool ID	Tool #	Plan Code	Accept Qty	Reject Qty	Reject Number	Insp. Stamp
Draw Nbr	**Revision Nbr**								
D4190	~~PA1~~ ~~PA6~~ PA9 11.03.31								
100	Pick Kit	0.00							
Packaging	**Memo**	0.00	11.03.31			2	Ø		
Packaging									
110		0.00							
Small Fab	**Memo**	0.00	11.03.31			2	Ø		
Small Fab	ASSEMBLE AS PER DWG								
120	QC5- Inspect part completeness to step on W/O	0.00	POSITIVE RECALL						
QC	**Memo**	0.00	11.04.01			2	Ø		
Quality Control									

PRELIMINARY ISSUE

Dart Aerospace Ltd

W/O:		WORK ORDER CHANGES					
DATE	STEP	PROCEDURE CHANGE	By	Date	Qty	Approval Chief Eng / Prod Mgr	Approval QC Inspector

Part No: _____ **PAR #:** _____ **Fault Category:** _____ **NCR:** Yes No **DQA:** _____ **Date:** _____

Resolution: _____ **Disposition:** _____ **QA: N/C Closed:** _____ **Date:** _____

NCR:		WORK ORDER NON-CONFORMANCE (NCR)						
DATE	STEP	Description of NC Section A	Corrective Action Section B			Verification Section C	Approval Chief Eng	Approval QC Inspector
			Initial Chief Eng	Action Description Chief Eng	Sign & Date			

NOTE: Date & initial all entries

Work Order ID 65495

January 19, 2011 7:58:19 AM

Item ID: D4190-041
Revision ID: PRELIM
Item Name: External Bellcrank Assembly

Accept

Setup **Start**
Stop

Start Date: 1/19/11 **Start Qty:** 2.00
Required Date: 2/04/11 **Req'd Qty:** 2.00
Reference:

Cust Item ID:
Customer:

Run **Start**
Stop

Approvals: **Process Plan:** _____ **Date:** _____ **Tooling:** _____ **Date:** _____
QC: _____ **Date:** _____ **SPC (Y/N):** _____ **Date:** _____

Sequence ID/ Work Center ID	Operation Description	Set Up/ Run Hours	Tool ID	Tool #	Plan Code	Accept Qty	Reject Qty	Reject Number	Insp. Stamp
130	Identify as per dwg & Stock Location: Pal. Shelf	0.00							
Packaging	Memo	0.00							
Packaging									
140	QC21- Final Inspection - Work Order Release	0.00							
QC	Memo	0.00							
Quality Control									

11-03-31 2

pl 11-06-9 (2)

POSITIVE RECALL
EFFECTIVE 11-2-19 AUTH
RELEASED _____ DATE _____

RD1344.

Pulled on D4195-041

Dart Aerospace Ltd

W/O:		WORK ORDER CHANGES					
DATE	STEP	PROCEDURE CHANGE	By	Date	Qty	Approval Chief Eng / Prod Mgr	Approval QC Inspector

Part No: _____ **PAR #:** _____ **Fault Category:** _____ **NCR:** Yes No **DQA:** _____ **Date:** _____

Resolution: _____ **Disposition:** _____ **QA: N/C Closed:** _____ **Date:** _____

NCR:		WORK ORDER NON-CONFORMANCE (NCR)						
DATE	STEP	Description of NC Section A	Corrective Action Section B			Verification Section C	Approval Chief Eng	Approval QC Inspector
			Initial Chief Eng	Action Description Chief Eng	Sign & Date			

NOTE: Date & initial all entries

Picklist Print

January 19, 2011 7:58:05 AM

Work Order ID: 65495

Parent Item: D4190-041

Parent Item Name: External Bellcrank Assembly

Start Date: 1/19/11 **Required Date:** 2/04/11

Start Qty: 2.00 **Required Qty:** 2.00

Comments: IPP REV:A NEW ISSUE 11-01-12 JLM VERIFIED BY:DD

Component Item ID/ Item Name	Replacement Item ID	Mfg/ Purch	Bin Item	Primary Location	Last Location	Route Seq ID	Unit of Measure	Qty on Hand	Qty per Kit	Total Qty	Qty Issued	Date Issued	Status
D4190-1 Bellcrank		Manufactured	No				Each	0.0000		2	B65499		
NAS77C3-011 Bushing		Purchased	No				Each	0.0000		2	M116750		
NAS75C3-008 Bushing		Purchased	No				Each	0.0000		2	M116738		

Dart Aerospace Ltd

W/O:		WORK ORDER CHANGES					
DATE	STEP	PROCEDURE CHANGE	By	Date	Qty	Approval Chief Eng / Prod Mgr	Approval QC Inspector

Part No: _____ **PAR #:** _____ **Fault Category:** _____ **NCR:** Yes No **DQA:** _____ **Date:** _____

Resolution: _____ **Disposition:** _____ **QA: N/C Closed:** _____ **Date:** _____

NCR:		WORK ORDER NON-CONFORMANCE (NCR)						
DATE	STEP	Description of NC Section A	Corrective Action Section B			Verification Section C	Approval Chief Eng	Approval QC Inspector
			Initial Chief Eng	Action Description Chief Eng	Sign & Date			

NOTE: Date & initial all entries

ITEM NO.	QTY. -041	PART NUMBER	DESCRIPTION
1	X	D4190-041	EXTERNAL BELLCRANK ASSEMBLY
2	1	D4190-1	EXTERNAL BELLCRANK
3	1	NAS77C3-011	BUSHING
4	1	NAS75C3-008	BUSHING (ALT - NAS537C3-025)

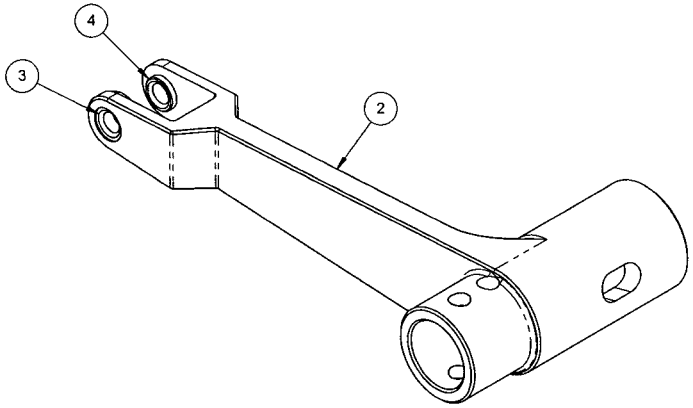

SHOP COPY
RETURN TO
ENGINEERING
UNCONTROLLED COPY
SUBJECT TO AMENDMENT
WITHOUT NOTICE
WORK ORDER
NO. 65495
CL 11101119

D4190-041 EXTERNAL BELLCRANK ASSEMBLY

NOTES:
1) MATERIAL: N/A
2) FINISH: N/A
3) TOLERANCES: PER DART QSI 018 UNLESS OTHERWISE NOTED
4) UNITS: INCHES UNLESS OTHERWISE NOTED
5) BREAK SHARP EDGES: 0.005 TO 0.010 MAX
6) IDENTIFICATION: IDENTIFY PER QSI 044 6.1
7) WEIGHT: 0.55 lbs
8) NAS77C3-011 BUSHING IS A PRESS FIT
9) NAS75C3-008 BUSHING IS A FLOATING FIT

PRELIMINARY ISSUE
10.11.16

REV.	DESCRIPTION	BY	DATE
PA6	NEW ISSUE		10.11.16

DESIGN		DART AEROSPACE LTD HAWKESBURY, ONTARIO, CANADA	
DRAWN			
CHECKED		DRAWING NO. D4190	REV. PA6 SHEET 1 OF 2
MFG. APPR.			
APPROVED		TITLE BELLCRANK	SCALE NTS
DE APPR.			
DATE	10.11.16		

COPYRIGHT © 2010 BY DART AEROSPACE LTD
THIS DOCUMENT IS PRIVATE AND CONFIDENTIAL AND IS SUPPLIED ON THE EXPRESS CONDITION THAT IT IS NOT TO BE USED FOR ANY PURPOSE OR COPIED OR COMMUNICATED TO ANY OTHER PERSON WITHOUT WRITTEN PERMISSION FROM DART AEROSPACE LTD.

Dart Aerospace Ltd

W/O:		WORK ORDER CHANGES					
DATE	STEP	PROCEDURE CHANGE	By	Date	Qty	Approval Chief Eng / Prod Mgr	Approval QC Inspector

Part No: _____ **PAR #:** _____ **Fault Category:** _____ **NCR:** Yes No **DQA:** _____ **Date:** _____

Resolution: _____ **Disposition:** _____ **QA: N/C Closed:** _____ **Date:** _____

NCR:		WORK ORDER NON-CONFORMANCE (NCR)						
DATE	STEP	Description of NC Section A	Corrective Action Section B			Verification Section C	Approval Chief Eng	Approval QC Inspector
			Initial Chief Eng	Action Description Chief Eng	Sign & Date			

NOTE: Date & initial all entries

ITEM NO.	QTY. -041	PART NUMBER	DESCRIPTION
1	X	D4190-041	EXTERNAL BELLCRANK ASSEMBLY
2	1	D4190-1	EXTERNAL BELLCRANK
3	1	NAS77C3-011	BUSHING
4	1	NAS75C3-008	BUSHING (ALT - NAS537C3-025)

w/o 65495

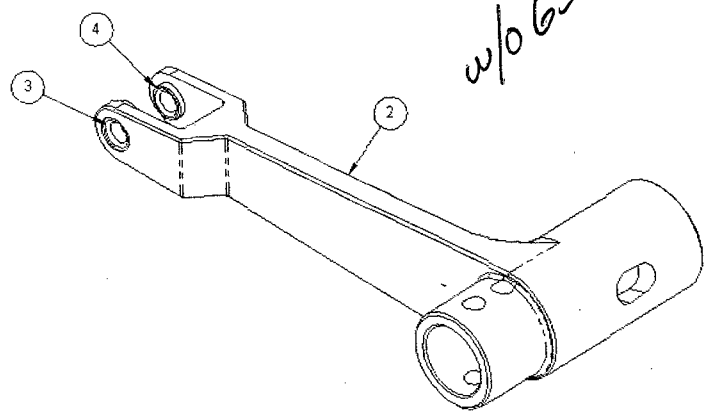

D4190-041 EXTERNAL BELLCRANK ASSEMBLY

NOTES:
1) MATERIAL: N/A
2) FINISH: N/A
3) TOLERANCES: PER DART QSI 018 UNLESS OTHERWISE NOTED
4) UNITS: INCHES UNLESS OTHERWISE NOTED
5) BREAK SHARP EDGES: 0.005 TO 0.010 MAX
6) IDENTIFICATION: IDENTIFY PER QSI 044 6.1
7) WEIGHT: 0.55 lbs
8) NAS77C3-011 BUSHING IS A PRESS FIT
9) NAS75C3-008 BUSHING IS A FLOATING FIT

PRELIMINARY ISSUE
10.11.16

REV.	DESCRIPTION	BY	DATE
PA9	NEW ISSUE		10.11.16

DESIGN	
DRAWN	
CHECKED	
MFG. APPR.	
APPROVED	
DE APPR.	
DATE	10.11.16

DART AEROSPACE LTD
HAWKESBURY, ONTARIO, CANADA

DRAWING NO. D4190 — REV. PA9 — SHEET 1 OF 2

TITLE: BELLCRANK — SCALE: NTS

COPYRIGHT © 2010 BY DART AEROSPACE LTD
THIS DOCUMENT IS PRIVATE AND CONFIDENTIAL AND IS SUPPLIED ON THE EXPRESS CONDITION THAT THIS IS NOT TO BE USED FOR ANY PURPOSE OR COPIED OR DISSEMINATED TO ANY OTHER PERSON WITHOUT WRITTEN PERMISSION FROM DART AEROSPACE LTD.